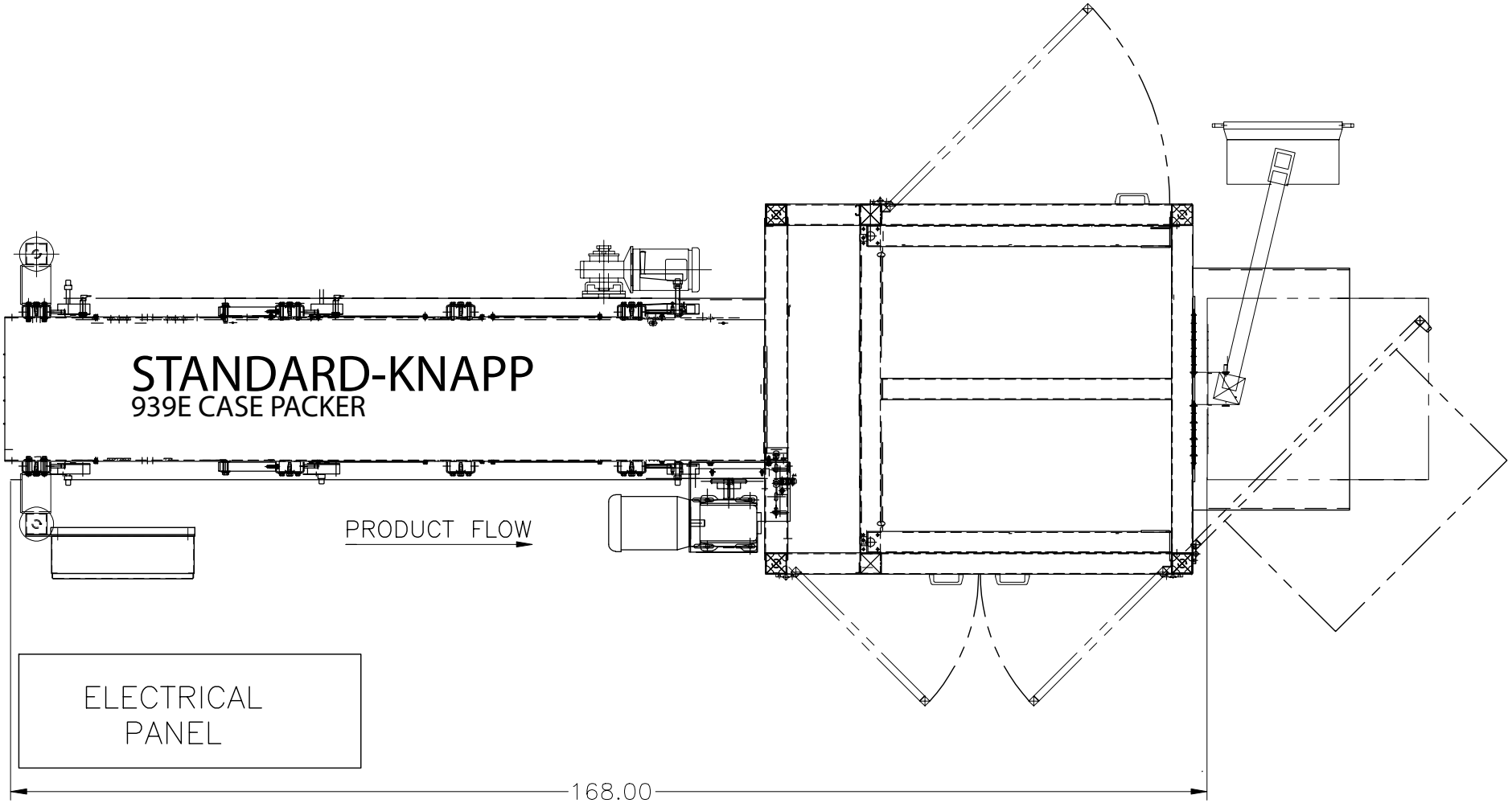

Standard Knapp
a BRUNE Bend Company

PROPRIETARY NOTICE

This drawing and the subject matter thereof is the exclusive property of Standard-Knapp, Inc. and is to be treated by us as a confidential proprietary information. This drawing, or the subject matter thereof, shall not be reproduced or disclosed to others without the written consent of Standard-Knapp and will be returned to Standard-Knapp upon request.

THE FOLLOWING APPLY - UNLESS OTHERWISE SPECIFIED
ENGINEERING & TOLERANCES
FOR ISSUE TOLERANCE
TOLERENCES ARE
X.XXX +/- 0.005
X.XX +/- 0.010
PARALLELISM +/- 0.010 IN PER FT
STRAIGHTNESS +/- 0.010 IN PER FT
PERPENDICULARITY +/- 0.005 IN PER IN
ANGLES +/- 1/2 DEGREE
CONCENTRICITY 0.010
TREATMENT
FINISH
MATERIAL

ALL DIMENSIONS ARE IN INCHES
WHERE ALL SCREWS 0.250 / 0.005
THROUGH PLANAR STEEL
STAINLESS STEEL SHEET METAL FINISH - TEXTURE 150 GRIT
ALL BENDS 90 DEGREES
ALL MACH PADS TO BE 1/4 THICK ENGINEAL THICKNESS
ALL MACHINED SURFACES - FINISH 125 um
DO NOT SCALE DRAWING

APPROVALS	DATE
DRAWN BY NICK	09/3/2008
APPROVED BY	

Standard Knapp
a BRUNE Bend Company

TITLE STANDARD-KNAPP 939E CASE PACKER

SIZE | DRAWING NO. | REV.

SCALE | SHEET