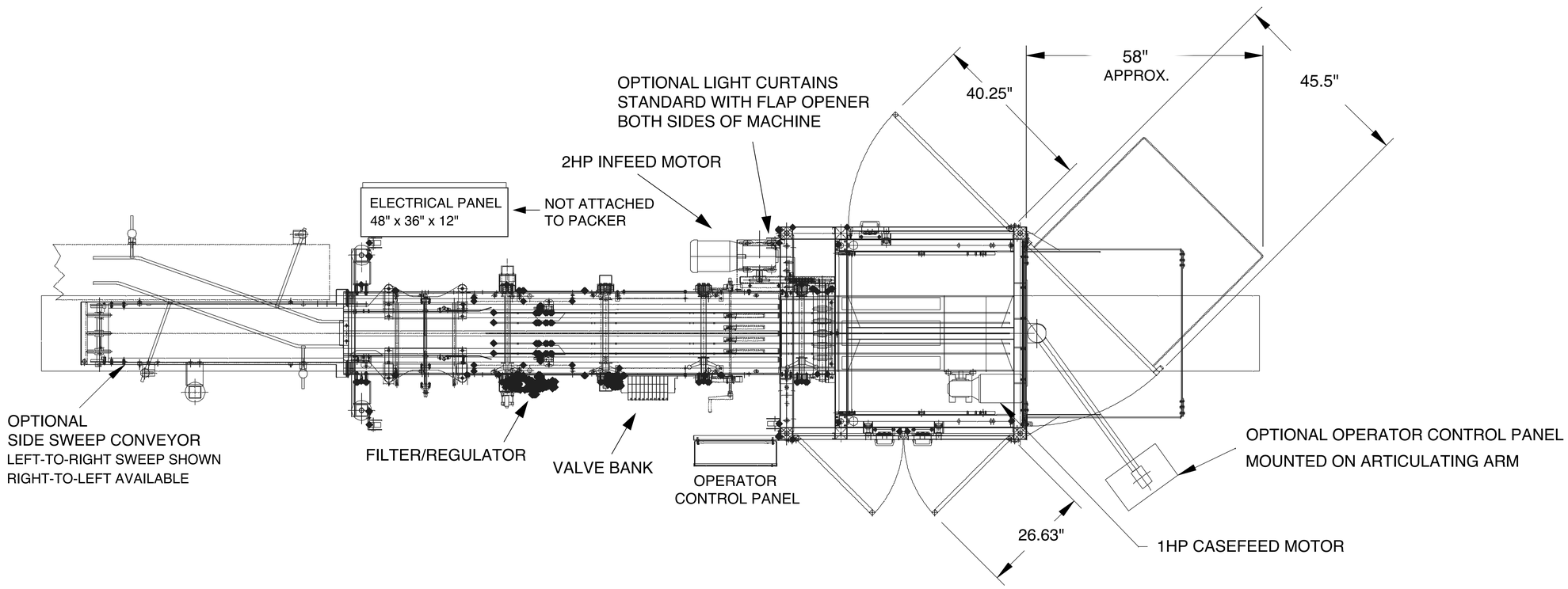
OPTIONAL LIGHT CURTAINS
STANDARD WITH FLAP OPENER
BOTH SIDES OF MACHINE
40.25"
58"
APPROX.
45.5"
2HP INFEED MOTOR
ELECTRICAL PANEL
48" x 36" x 12"
NOT ATTACHED
TO PACKER
OPTIONAL
SIDE SWEEP CONVEYOR
LEFT-TO-RIGHT SWEEP SHOWN
RIGHT-TO-LEFT AVAILABLE
FILTER/REGULATOR
VALVE BANK
OPERATOR
CONTROL PANEL
OPTIONAL OPERATOR CONTROL PANEL
MOUNTED ON ARTICULATING ARM
26.63"
1HP CASEFEED MOTOR

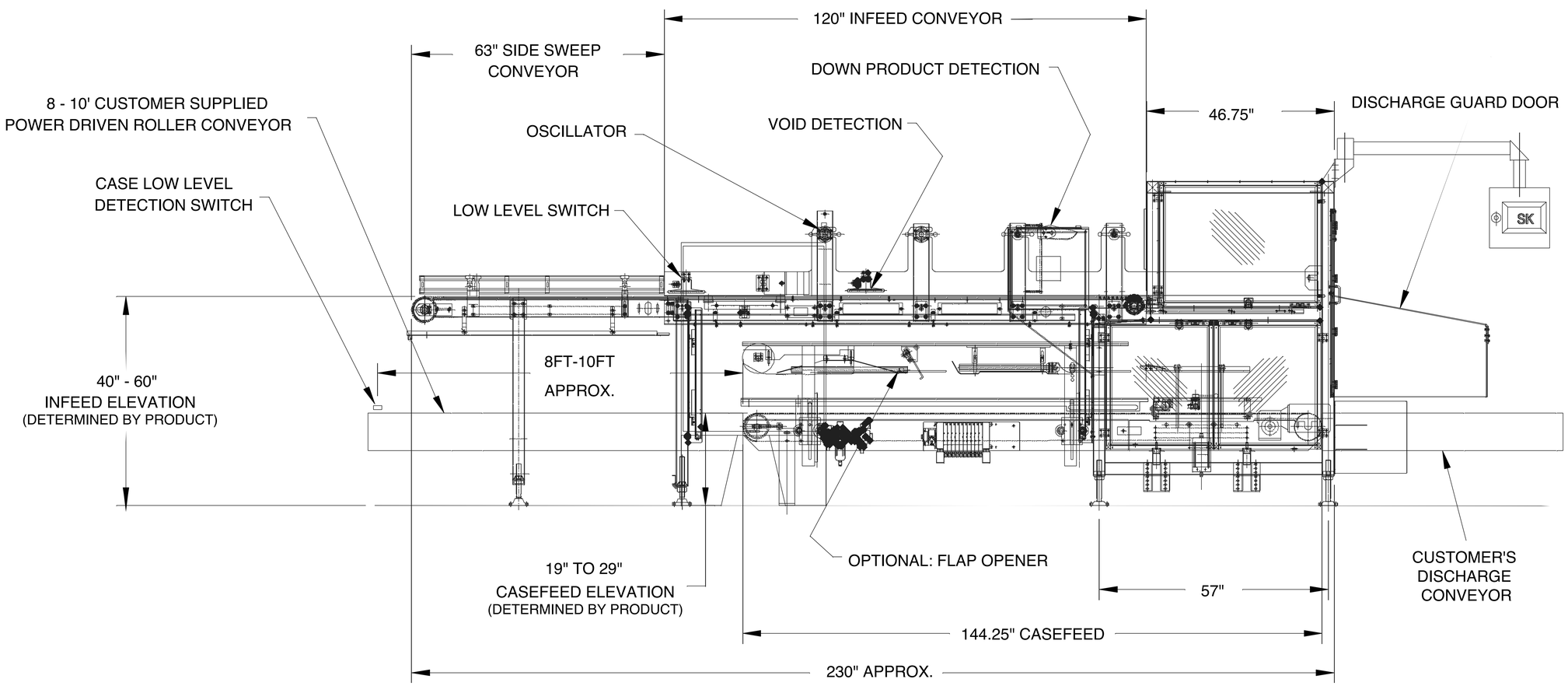
120" INFEED CONVEYOR
63" SIDE SWEEP
CONVEYOR
DOWN PRODUCT DETECTION
8 - 10' CUSTOMER SUPPLIED
POWER DRIVEN ROLLER CONVEYOR
OSCILLATOR
VOID DETECTION
46.75"
DISCHARGE GUARD DOOR
CASE LOW LEVEL
DETECTION SWITCH
LOW LEVEL SWITCH
SK
8FT-10FT
APPROX.
40" - 60"
INFEED ELEVATION
(DETERMINED BY PRODUCT)
19" TO 29"
CASEFEED ELEVATION
(DETERMINED BY PRODUCT)
OPTIONAL: FLAP OPENER
57"
CUSTOMER'S
DISCHARGE
CONVEYOR
144.25" CASEFEED
230" APPROX.